WATER HEATER STRAPPING REQUIREMENT

OC PLANNING
A DIVISION OF OC PUBLIC WORKS

ocpCustomerCare@ocpw.ocgov.com | www.ocplanning.net

300 N. Flower Street
Santa Ana, CA 92703
714.667-8888
714.667-8885

SECTION 508.2 OF 2010 CALIFORNIA PLUMBING CODE REQUIRES THAT ALL WATER HEATERS BE ANCHORED OR STRAPPED TO RESIST MOVEMENT DURING AN EARTHQUAKE. THIS CAN BE ACCOMPLISHED BY INSTALLING ANY OF THE OVER-THE-COUNTER PRODUCTS ESPECIALLY MADE FOR RESTRAINING WATER HEATERS (EXAMPLE 1) OR YOU CAN MAKE YOUR OWN OUT OF A HEAVY-DUTY METAL STRAP MATERIAL (EXAMPLE 2).
IT IS REQUIRED THAT AT LEAST TWO RESTRAINTS ARE USED, WITH ONE IN THE UPPER ONE-THIRD AND ONE IN THE LOWER ONE-THIRD OF THE WATER HEATER. FASTEN OF THE ANCHOR OR STRAP TO THE BUILDING SRUCTURE, USE A LAG SCREW NOT LESS THAN ¼" DIAMETER WITH A MINIMUM PENETRATION OF 1½"INTO A WOOD STUD OF THE WALL, AND WITH A WASHER BETWEEN THE HEAD OF THE SCREW AND THE RESTRAINT.
BELOW ARE EXAMPLES OF ACCEPTABLE METHOS FOR RESTRAINING A WATER HEATER.
NOTE: A PLUMBING PERMIT IS REQUIRED ANY TIME A WATER HEATER IS INSTALLED OR REPLACED.

EXAMPLE 1

THESE TYPES OF RESTRAINTS ARE OVER-THE-COUNTER PRODUCTS SOLD AT YOUR LOCAL HARDWARE STORE.

DRILL PILOTS ON CENTER LINE OF STUD, INSERT SCREWS THROUGH PUNCHED HOLES IN STRAP. USE WASHERS.

THE LOWER STRAP MUST BE A MINIMUM OF 4" ABOVE THE CONTROL UNIT.

THIS 18" STAND OR PLATFORM IS REQUIRED FOR HEATERS INSTALLED IN RESIDENTIAL GARAGES AND IN ADJACENT SPACES THAT OPEN TO THE GARAGE AND ARE NOT PART OF THE LIVING SPACE OF A DWELLING UNIT (SECTION 508.14, CPC).

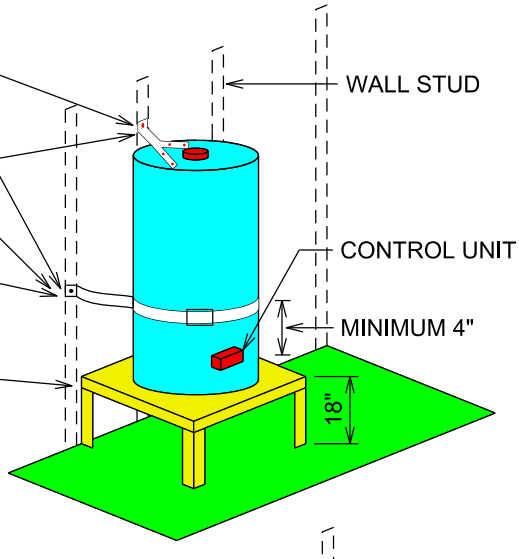

EXAMPLE 2

MINIMUM 22 GAUGE X 3/4" WIDE METAL STRAP MATERIAL INSTALLED WITHIN THE TOP 1/3 OF THE HEATER AND THE BOTTOM 1/3 OF THE HEATER.

DRILL PILOTS ON CENTER LINE OF STUD, INSERT SCREWS THROUGH PUNCHED HOLES IN STRAP.

USE MINIMUM 1/4" LAG SCREWS WITH MINIMUM 1-1/2" PENETRATION. USE WASHERS

THE LOWER STRAP MUST BE A MINIMUM OF 4" ABOVE THE CONTROL UNIT.

THIS 18" STAND OR PLATFORM IS REQUIRED FOR HEATERS INSTALLED IN RESIDENTIAL GARAGE AND IN ADJACENT SPACES THAT OPEN TO THE GARAGE AND ARE NOT PART OF THE LIVING SPACE OF A DWELLING UNIT (SECTION 508.14, CPC).

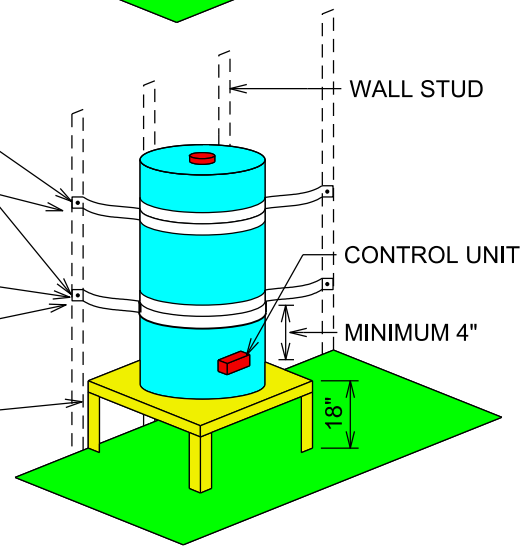

PROPERTY OWNER:	PROPERTY ADDRESS:	PAGE: 1 OF 1
		DATE:
		SCALE: