TENTATIVE TRACT MAPS PACKET

OC Planning

714.667.8888 714.834.4772

www.ocplanning.net

ocpCustomerCare@ocpw.ocgov.com

OC PLANNING
A DIVISION OF OC PUBLIC WORKS

Submittal Checklist

County of Orange

TENTATIVE TRACT MAP

This application package has been created to assist you with the submittal of a Tentative Tract Map. This package is designed with a one page checklist for the items you need to submit followed by instructions for preparing your submittal.

In order to ensure an accurate and expedited application process, submittals will be by appointment only. To schedule an appointment please call (714) 834-2626 or (714) 834-5049

DATE COMPLETED	SCREEN CHECK
	1. Deposit: (Map Processing) $5,000.00 Deposit: (Environmental Processing) $3,500.00 Fee: (Orange County Fire Authority Map Review) $303.00
	2. Twenty (20) copies of the Tentative Tract Map
	3. Planning Application (completed and signed)
	4. Environmental Review –Environmental Planning division may require additional information.
	5. Will-serve letters from water supplier and sewering agency.
	6. A letter or a note on the tentative map stating that all existing easement and irrevocable offers of dedication that affect the property being subdivided are shown on the tentative tract map.

DATE COMPLETED	OFFICIAL FILING
	1. Deposit: $5,000.00
	2. Twenty (20) copies of the tentative tract map
	3. Ownership List; radius map (assessor parcel page); and stamped, addressed #10 business envelopes (no metered mail).
	4. A letter or a note on the tentative map stating that all parties having a beneficiary interest in the property being subdivided are aware of and consent to the filing of the tentative tract map.

TENTATIVE TRACT MAPS

The following information supplements the Planning Application form to facilitate processing of tentative tract map applications.

Your cooperation with these instructions will insure that your application can be processed in the most expeditious manner possible.

Application for a tentative tract map requires preparation of a map illustrating the proposal and surrounding existing conditions, and submittal of additional information about the project to permit a complete evaluation of the proposal. The Orange County Subdivision Code sets forth all the necessary requirements for processing a tentative tract map (see sections 7-9-237 through 7-9-294). In the preparation of the tentative map, the **Advisory Solar Access Guidelines for Residential Subdivisions** should be utilized. In accordance with Section I.C. of the guidelines, evidence may have to be submitted if the guidelines are not used. If the guidelines are used, the following note should be placed on the tentative map:

> "In the design of this map, the Solar Access Guidelines adopted by the Board of Supervisors were considered."

Applications submitted with insufficient information cannot be accepted for filing.

1. TENTATIVE TRACT MAP

a. The map must include the information contained in Section 7-9-237 through 7-9-294 of the Subdivision Code.

b. In addition to the requirements of the Subdivision Code, the following information is needed:

   1) A statistical summary chart showing gross area of the project, area of public streets, area of private streets, open space areas, common area, and development area.

   2) Engineer's stamp and signature.

c. The tentative tract map shall display on the map all existing easements and irrevocable offers of dedications that affect the property being subdivided.

2 & 3. WATER AND SEWER LETTERS

Have the proposed water supplier and the proposed sewering agency complete the forms and return them to you. Please include the signed letters with the first submittal for review (see attached).

4. DRAFT INITIAL STUDY

A tentative tract map is considered a "project" by the California Environmental Quality Act of 1970. Therefore, an assessment of the possible environmental impact of the project must be made prior to the map being filed.

5. MAP FOLDING INSTRUCTIONS

If a sheet larger than 8-1/2" x 14" is used to prepare the required map please fold the map as shown (see attached diagram).

PROCEDURES

1. All tentative tract maps should be submitted to Land Use Planning for a preliminary review at the initial stage of processing. A deposit of 5,000.00 for map processing and a deposit of $3,500.00 for environmental processing will be collected for tentative maps submitted for screen check.

   Complete the forms described in Items 1 through 3 above and submit original forms and 20 copies of the map. These items will be sent to all members of the Orange County Subdivision Committee. The staffs of the members will evaluate the proposal and should return comments to the Subdivision Section of Land Use Planning within fifteen (15) working days. These comments are then assembled and forwarded to you. The comments may include mandatory changes to the map or forms, suggested changes to improve the project, and possible conditions that may be placed on the tentative tract map if approved.

   Also at this time, the tentative tract map application is checked to insure compliance with the Orange County General Plan, the adopted zoning on the site, the Subdivision Code, and other laws and ordinances that may affect the proposal. If any conflict arises between the proposed and General Plan, the zoning , or other laws, the conflict must be resolved prior to acceptance of the Tentative tract map for filing.

2. ENVIORNMENTAL DETERMINATION

Concurrent with the submittal of the preliminary review material, that information required by the Initial Study (Item 4 above) will be forwarded to the Environmental Planner.

3. OFFICIAL FILING

After the required corrections and/or additions have been made to the map and forms, and either (1) a Negative Declaration has been posted, or (2) fifteen (15) days have elapsed since the date that a Draft Environmental Impact Report has been accepted, the application may be submitted for official filing. Submit 35 copies of the map and the filing deposit of $5,000.00.

In the filing process for tentative tracts maps, all owners of property within 300' of the exterior boundary of the subject site will be notified of the public hearing. To meet the requirements for notification, the following will be required:

a. Ownership list

   1) A typed list of all owners of property within 300', including owners of the subject property, their addresses with zip codes, and assessor parcel numbers, as shown on the latest County tax rolls.

2) You must certify to the accuracy and completeness of the list by your signature. An incomplete list discovered after a project is approved may negate such approval.

b. Map

1) Assessor parcel map showing all properties within 300' of the exterior boundaries of the subject site.

2) You may obtain the information necessary to complete the ownership list and map from the Assessor's Office, 623 N. Ross Street, Santa Ana. A private firm such as a title company will assemble the required information for a fee.

c. Envelopes

1) The name and address including zip code shall be typed (or pasted) on legal (4" x 9") size envelope with **first class postage** for each property owner on the list. **DO NOT USE A POSTAGE METER**. The parcel number may be included for convenience.

2) Only one envelope need be prepared for property owners of more than one parcel which is to be mailed to the identical address.

3) Return address will be stamped on envelope by the Agency. **Do not use envelopes with the personal or business return address.**

4. SUBDIVISION COMMITTEE

Within 50 days of the official filing being deemed complete the Orange County Subdivision Committee will discuss the proposed tentative tract map. You will be informed of the date, place and time of the Subdivision Committee meeting on your proposal. YOU OR YOUR AGENT ARE REQUIRED TO ATTEND THE MEETING. The committee may approve or disapprove the project, or with the consent of the applicant, continue the application to a later meeting.

5. FINAL TRACT MAP

The lots shown on an approved tentative tract map are not legal lots until a final tract map in substantial compliance with the approved tentative tract map, is prepared and recorded. The County Surveyor's Office processes all final tract maps.

6. EXTENSION OF TIME

Within three (3) years after the date of approval of the tentative map, a final tract map may be recorded. Approving action on a tentative map becomes null and void unless a final map is recorded within this period.

An extension of time in which to record a final map for a period of time not to exceed two (2) years may be granted by the Director of OC Public Works, provided an application for the extension of time is made by the subdivider prior to the expiration date of the initial three (3) year period.

Attachments: Water Letter
Sewer Letter
Map Folding Instructions

Proposed Water Purveyor's

Statement of Certification

County of Orange

This minimum information shall be furnished when filing any Proposed Tentative Tract Map in accordance with the Orange County Subdivision Code, Section 7-9-244.

Property Location _____

_____

Name of Water Purveyor _____

Permit Held – Date Issued _____

Current Flow _____

Current Storage Capacity _____

Quantity of Water Available at The Points of Connection _____

Additional Distribution Commitments _____

_____

Amount and Date of Any Projected Expansion of Facilities _____

_____

Can an adequate supply of domestic water, meeting the laws and standards of Health and Safety Code Section 74010-4038 and the California Administrative Code, Title 17, Section 7050-7081, be furnished to all parcels?

- ☐ YES
- ☐ NO

Remarks _____

_____

_____

FOR THE WATER PURVEYOR:

_____ NAME

_____ TITLE

_____ DATE

TENTATIVE TRACT MAP #: _____

Proposed Sewering Agency's

Statement of Certification

County of Orange

This minimum information shall be furnished when filing any Proposed Tentative Tract Map in accordance with the Orange County Subdivision Code, Section 7-9-244.

Property Location _____

_____

Capacity of the Collector _____

Name of Sewering Agency _____

Current Capacity of the Sewage Treatment Facility _____

Current Amount of Sewage Being Treated _____

Additional Amount of Committed Sewage Treatment Capacity _____

_____

Amount and Date of Any Projected Expansion of Facilities _____

_____

I hereby certify that this property can be served by means of a public sanitary sewerage system and that the discharge of wastes from the proposed subdivision into the existing community sewer system will not result in violation of the existing requirements prescribed by the California Regional Water Quality Control Board.

FOR THE SEWERING AGENCY:

_____ NAME

_____ TITLE

_____ DATE

TENTATIVE TRACT MAP #: _____

Map Folding
Instructions

County of Orange

1st. STEP: Fold all maps and drawings to a finished size of 8 ½" by 14". Fold from left to right with 8 ½" folds. If the size of the map or drawing exceeds equal folds of 81/2", adjust next to last fold to allow a final fold of 8 ½".

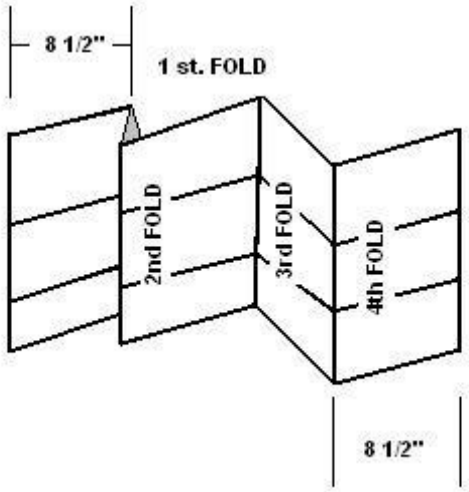

2nd STEP: Fold from top to bottom with 14" folds, leaving the project name clearly in view.

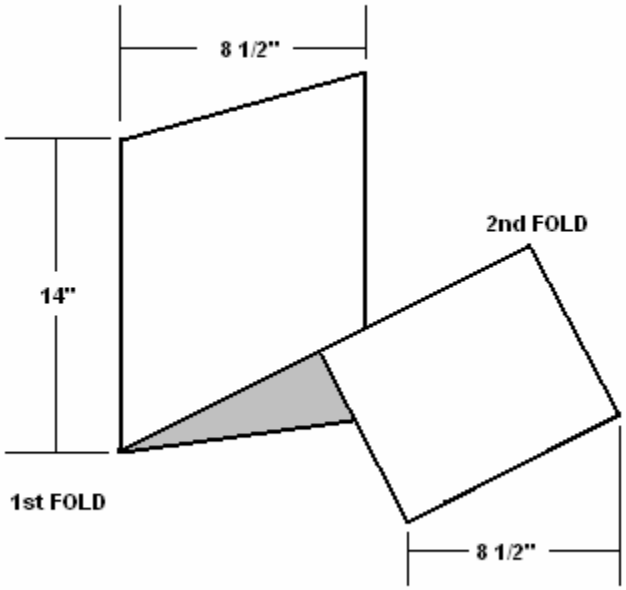

Subdivision Submittal Information
Application

County of Orange

This form is used for all Tentative Tract Map Applications, Tentative Parcel Map Applications, Lot Line Adjustments, Certificate of Compliance, etc…

APPLICATION #: _____

PROJECT INFORMATION

Application Type: _____ **Date:** _____

☐ Tentative Tract Map ☐ Tentative Parcel Map ☐ Lot Line Adjustment ☐ Certificate of Compliance

	APN:
Street Address Or Location:	Zoning:

Project Description:

Existing Site Conditions:

Previous Approvals:

CONTACT INFORMATION

Property Owner:		**Project Agent**	**License**
Mailing Address:		**Mailing License**	
City:	**Zip:**	**City:**	**Zip:**
Phone #:	**Email:**	**Phone #:**	**Email:**

STAFF USE ONLY

Assessor's Parcel #: _____ Legal: _____ Lot Size: _____

Zoning: _____ Gen Plan: _____ Sup District: _____ Flood Plan: _____

☐ Specific Plan: _____ **Zoning:** _____ Coastal Zone: _____

☐ PC: _____ **Zoning:** _____ Sphere of Influence: _____

☐ Review Board: _____ School District: _____

CERTIFICATION

I acknowledge that:

1. There are no assurances at any time, implicitly or otherwise, regarding final staff recommendations to the decision making body about this application.
2. Major changes of the proposed project may require a new application and payment of new fees.
3. The County will charge the actual cost of the staff work on the application per the current Fee Ordinance. The costs of processing the application will be deducted from the deposit. If the deposit is reduced to a point that is insufficient to complete the future work, you will be notified to deposit additional amounts.

I hereby certify to the best of my knowledge that the information I have presented on this form and attached materials is true and correct. I also understand that additional data and information may be required prior to final action on this application. I have read and understand the contents contained in the above statements 1 through 3.

Print Name	Signature	Date

Please indicate Project "Bill to" : ☐ Project Owner ☐ Project Agent ☐ Other: _____

Environmental Information

County of Orange

PROJECT TITLE : _____

PROJECT LOCATION

Address: _____

City: _____ Zip: _____

PROJECT DESCRIPTION:

EXISTING ENVIRONMENTAL CONDITIONS:

ITEMIZATION OF ATTACHED SUPPORT DATA:

PREVIOUS COUNTY ACTION(S) AND/OR ENVIRONMENTAL DOCUMENTATION :

GOVERNMENT APPROVALS REQUIRED:

Contact Person(s): _____ Phone Number: _____

DECLARATION

I hereby declare that the statements furnished above, including any attached hereto, represent all information required for this initial evaluation. Said statements, together with any exhibits attached hereto, are true and correct. I hereby agree to pay all required fees for work performed by the County in processing, reviewing, and analyzing the necessary environmental documentation in accordance with adopted County Procedures.

_____ _____

SIGNATURE DATE

INSTRUCTIONS FOR APPLICANTS

This packet contains information to assist you in providing the basic information necessary for staff to evaluate the environmental impacts of your project. It contains three parts; a cover sheet, which provides an overview of the process and a description of possible environmental determinations for your project; instructions for completion of an Environmental Information Form; and the Environmental Information Form itself.

Complete and accurate information on your Environmental Information Form submittal will enable staff to process your project efficiently. If you need assistance, please contact Land Use Planning/Environmental Services at **(714) 834-2542**.

The Environmental Information Form:

The Environmental Information Form and supporting documentation provides the basic information necessary for the evaluation of your proposed project to determine its potential environmental effects. This information will be used to complete an Initial Study. Depending on the type and nature of your project, staff may request additional information/data beyond what is requested in the Environmental Information Form.

Environmental Determination:

After review of the information by Land Use Planning Division (LUPD), a determination will be made regarding the appropriate environmental documentation for your project. The determination will fall into one of three categories:

1. If the project is found exempt from CEQA, a Notice of Exemption will be prepared by EPSD staff. The notice will be returned to the County lead division along with the environmental determination memo. The Notice of Exemption will be filed by the lead division after the project has been approved in order to establish the statute of limitations for legal challenges.
2. If the project is not exempt but no significant environmental effects are anticipated, or if impacts can be mitigated or avoided by a change in project design or operation, a Negative Declaration will be prepared and posted.
3. If there is substantial evidence that any aspect of the project may cause a significant effect on the environment, the Planning and Development Services Department will prepare an EIR, or use a previously prepared EIR (if it adequately addresses the current project).

Submittal of Environmental Information Form and Supporting Documentation:
Environmental Information for public projects should be submitted directly to the:

Development Processing Center
300 N. Flower Street, Room 122,
Santa Ana, CA 92703

Instructions for Completing the Environmental Information Form

County of Orange

1. PROJECT TITLE

Provide the project name and file or case number.

2. PROJECT LOCATION

Describe the location of the project. Indicate the nearest major intersection or access point, the name of the community in which the project is located, and any other information that will allow easy identification of the project location.

3. PROJECT DESCRIPTION

Accurately and completely describe the nature of the proposed project. Indicate the size of the project, the area of influence, the reasons for proposing the project at this time, the anticipated schedule and any other features, that you feel, are necessary to describe the project. List any features of the project, which will reduce or eliminate potential adverse environmental effects.

4. EXISTING ENVIRONMENTAL CONDITIONS

Describe the existing environmental conditions on the project site. This description should include the following information (to the best of your knowledge):

a. **Earth:** Topography, slope, aspect, presence of geologic hazards, general soil types, etc.
b. **Water:** Drainage patterns, stream locations, flood hazards, ground water.
c. **Biological Resources:** Types of vegetation on site, animals known to frequent the site, approximate number and kind of trees and/or sensitive species on the site.
d. **Land Use:** Land uses on the project site and surrounding land.
e. **Hazards:** Environmental hazards known or suspected (e.g., previous waste disposal site, etc.).
f. **Cultural/Historical/Paleo/Archaeo Resources:** Any known or potential resources that are present on or near the site.
g. **Traffic:** Amount of traffic generated by the proposed project.

5. ITEMIZATION OF ATTACHED SUPPORTING DATA

List all supporting documents or exhibits submitted with the project. The following attachments must be included for all site-specific construction or development projects:

a. **Location:** Map with the project site outlined (1":2000' USGS base map or similar).
b. **Plot Plan:** The proposed site plan layout for the project. Please provide 8 ½ x 11 or 11 x 17 size graphics to be included with the environmental documentation.
c. **Photographs:** At least six (6) photographs of the project site mounted on 8½ x 11 cardboard stocks, and a key showing the directions and location from which the photographs were taken.

In addition to the items listed above, the following additional exhibits must be provided based on the project types listed.

a. Private-Initiated General Plan Amendments/Zone Changes/Specific Plans (site specific)

- Existing General Plan/Zoning maps for site and surrounding area.
- Existing Land Use Map for site and surrounding area.
- Proposed General Plan/Zoning maps for site and surrounding area.
- Existing and proposed topographic maps of project area.
- The following special studies as applicable: Traffic Report, Geotechnical report, Grading plans, Hydrologic study, Biological Study, Noise Study.
- Text of proposed revisions to regulations using underline and strike through notation to indicate additions and deletions.

a 1. Site Development Permits/Use Permits/Coastal Development Permits/Area Plans

- Existing, approved and proposed surrounding land use maps.
- Traffic study (if applicable).
- Geotechnical report (if applicable).
- Grading plan (if applicable).
- Hydrologic study (if applicable).
- Biological Study (for projects in Coto de Caza and other sites within the Central Coastal and Southern Sub-Region Natural Community Conservation Plan areas whenever applicable).

b. Other Projects: If a proposed project does not fall into the categories listed above, consult with Environmental Planning Services Division staff **(714) 834-2542** to determine appropriate supplemental documents.

Other technical information such as archaeological, paleontological, or biological surveys; foundation/soil reports; percolation test reports; noise studies or traffic analyses may be necessary in some cases. If such reports are needed in order to complete the CEQA documentation, you will be notified by Environmental Planning Services Division Project Manager, If any such reports have already been prepared, please include copies with your submittal.

6. PREVIOUS COUNTY ACTION(S) AND/OR ENVIRONMENTAL DOCUMENTATION

Please list any previous actions relative to the property and any previous environmental documentation covering the project.

7. GOVERNMENT APPROVAL(S) REQUIRED

Please indicate other approvals now or in the future that will be necessary to implement your project (e.g., Planning Commission, Board of Supervisors, Army Corps of Engineers). If federal of state funds are involved in the project indicate the funding source. If a General Plan consistency (65402) determination from any non-County agency is necessary, indicate which agency or city is involved. If state approval of any phase of the project is necessary please explain.

8. CONTACT PERSON(S)

Please give the name, telephone number, e-mail address, of the person most knowledgeable about the proposed project.

ADDITIONAL INFORMATION FOR SPECIAL PROJECTS

A. Construction and/or Development Projects, identify:

1. Grading quantities cut and fill yardage, slope height and ratio.
2. Alterations to natural drainage patterns that may occur.
3. Erosion control methods that may be used.
4. Whether clearing or vegetation control, or use of herbicides, defoliants, bulldozing, burning, or cutting will be required.
5. Trees or other significant vegetation that may be removed by type, size, and quantity.
6. Measures to be utilized to control dust.
7. Any noisy construction methods that may be used (e.g., pile drivers, jackhammers, or blasting).
8. Measures that will be used to minimize vehicular and pedestrian traffic disruption and project the public from construction hazards.
9. Landscaping, if any, that will be provided.
10. Measures that will buffer adjacent land uses from adverse impacts.

B. Acquisition projects, please identify:

1. Any property that may be condemned or persons relocated as a result of the project.
2. Ultimate use of the site.

Tract Number Assignment

County of Orange

To: County of Orange
Office of the County Surveyor
300 North Flower Street, Ste. 252
Santa Ana, CA 92703-5000

TRACT # _____

I _____ the record owner of the herein described land depose and state: that the subdivider named hereon has consent to file a Tentative Map thereon. Request is hereby made that a Tentative Tract number be assigned to said map.

Dated: _____ Signed: _____
OWNER

ASSESSOR PARCEL #: _____ _____
ADDRESS

LEGAL DESCRIPTION:

_____

_____

_____

_____

PROPOSED SUBDIVIDER:

_____
COMPANY OR NAME

_____
ADDRESS

_____
CITY

SUBDIVIDER'S ENGINEER/ SURVEYOR

_____
COMPANY OR NAME

_____
ADDRESS OR ENGINEER/SURVEYOR

_____
PHONE #

Subdivision will in
(Unincorporated Territory)
or
(City of _____)

This is a unit of
Tentative Tract # _____

SKETCH

The above Tentative Tract # is assigned to
the owner of the land described herein ONLY.
Fraudulent statements hereon shall be cause for cancellation.

WALL MAP NUMBER: _____
SUPERVISORIAL DIST: _____
THOMAS BROTHERS PAGE: _____
BLOCK & MODULE: _____

Authorization and Receipt #: _____

Dated: _____ By: _____
County Surveyor's Office