VIII. NOISE ELEMENT

OVERVIEW

The Noise Element, which is a mandatory component of the General Plan, contains information that relates to the noise environment in the unincorporated sections of Orange County. The Noise Element text is divided into the following sections:

- Overview
- Relationship to other Elements
- Relation to Federal, State and Local Agency Plans and Programs
- The Nature of Sound
- Existing Noise Environment
- Estimates of Affected Population
- Analysis of Future Conditions
- Objectives and Policies

Specifically, this Noise Elements responds to the requirements of Section 65302 (f) of the California Government Code. In so doing, the guidance provided by the State in "Guidelines for the Preparation and content of Noise Elements of the General Plan" (January 1976) has been adhered to.

The policies which relate to managing the County's noise environment are found in the Objectives and Policies section of this

Element. They reflect a series of decisions by elected officials based in part on studies that incorporate increasingly sophisticated measurements and analyses. In total, they provide a means of relating the broad goals and patterns depicted in the General Plan to the County's project-specific responsibilities.

Definitions for a number of key terms related to the measurement and evaluation of noise are contained in Appendix VIII-1 of the General Plan Appendices. The terms are arranged in alphabetical order in one location to allow for greater clarity and brevity in the Noise Element text itself.

The scope of the Element includes the unincorporated portions of the County of Orange. The purpose of the Noise Element is to provide a statement of public policy and a decision framework for the maintenance of a quiet environment. The Noise Element identifies the sources of noise, analyzes the extent of the noise intrusion, and estimates its potential impact upon the County. This identification process in turn provides the basis for goals, policies, and implementation programs designed to preserve, where possible, a quiet environment in the County of Orange.

The objectives achieved by the development of the Noise Element are:

- Identification in quantitative, numerical terms, of existing and projected noise levels, noise sources, and noise-sensitive land uses in the County.
- Direction for implementation programs which may be used to achieve and maintain a desirable noise environment.

RELATIONSHIP TO OTHER ELEMENTS

The broad, noise-related goal of the County of Orange is to:

> ***Protect the health, safety, and general welfare of County residents by reducing noise levels and establishing compatible land uses in noise-impacted areas.***

This goal promotes the amelioration of noise impacts by both reducing the noise produced by various sources and by guiding land uses so they are compatible with existing (or projected) long-term average noise levels.

While this goal has a high priority, it must be achieved while maintaining internal consistency among the other elements of the General Plan as required by state law. Therefore, the Noise Element does not replace nor supersede any of the other General Plan elements; instead, the Element addresses, amplifies, and supports other elements as they relate to noise issues. The Land Use and Noise Elements are strongly interrelated. The Noise Element identifies land uses which are considered sensitive to noise and contains guidelines for achieving compatibility between land use and community noise levels. This

information is intended to provide guidance in land use decisions including the general distribution, location, and intensity of land uses.

A significant relationship also exists between the Transportation and Noise Elements. Because transportation systems are a major source of noise, their location, capacity, and design often determine the extent of noise impacts on surrounding land uses. Once commitment is made on transportation systems, land uses should be examined to identify compatibility with predicted noise levels generated by that system. The Noise Element relates to the Transportation Element through proposed policies for design, location, and fiscal considerations in the construction of new facilities.

The Housing Element is indirectly affected by the Noise Element through the Land Use Element. Residences are identified as some of the most noise-sensitive uses. The Noise Element suggests location and design considerations for housing as well as attenuation measures to reduce interior noise levels. Land that is considered marginal for residential use because of existing or projected noise impacts may provide an opportunity for residential use through careful design. Such design considerations include measures to insure that interior and exterior noise levels are satisfactorily attenuated to meet County standards.

The Noise Element is also closely related to the Resources Element, since noise can adversely affect the enjoyment of quiet activities in open space. Conversely, open space can be employed to buffer noise-sensitive land uses through separation and extension landscaping.

RELATIONSHIP TO FEDERAL, STATE AND LOCAL AGENCY PLANS AND PROGRAMS

The purpose of this section is to provide a general overview as to the noise-related roles and responsibilities of different levels of government as they relate to environmental noise.

At the federal level, there are three separate agencies which have a significant impact on Orange County's noise environment. They are the Environmental Protection Agency (EPA), the Department of Defense and the Department of Transportation (DOT). In addition, the Department of Housing and Urban Development and the Federal Housing Administration establish standards for projects which receive their financial support.

The stated role for EPA has been to provide leadership in the national noise abatement effort. While not as extensive as it was during the 1970s, a key aspect of this effort has been sponsorship of scientific studies of the relationships between noise levels and human response. Another key role of EPA has been in assisting other federal agencies, states, and local jurisdictions in taking steps to ensure as healthy an environment as is

COMMON NOISE SOURCE LEVELS

40 dBA: quiet residential area

55-70 dBA: dishwasher

75-80 dBA: flush toilet

90 dBA: truck

110 dBA: busy video arcade

feasible.

The Department of Defense (DOD), in conjunction with the State of California National Guard Bureau, operates an air installation at Los Alamitos. Noise effects from operations at Los Alamitos are not significant on unincorporated areas, however.

The Department of Transportation is significant in that its operating agencies are involved in setting standards and safety regulations for civil aviation, railroads, transit facilities and vehicles, and those freeways that are a part of the Interstate System. These agencies are the Federal Aviation Administration, the Federal Railway Administration, the Urban Mass Transportation Administration, and the Federal Highway Administration.
The State of California is responsible for establishing regulations for noise control where not preempted by the federal government. The federal government has largely pre-empted control of noise from aircraft, railroads, and federal highways. The State regulates noise levels of motor vehicles, motorcycles, motor boats, and freeway noise as it affects classrooms, and has set noise insulation standards for multi-family dwellings, hotels, and motels. The State also has established noise impact boundaries around airports, and noise planning standards.

Of particular importance are the State requirement for the preparation of each local jurisdiction's noise element (California Government Code, Section 65302(f)), noise insulation standards (California Administrative Code, Title 25) and the noise standards related to airports and their environs (Title 21). The State, through CALTRANS and the California Transportation Commission, also exerts significant influence on the noise environment through the financing,

construction, and maintenance of the State highway system.

Local jurisdictions share the responsibility of maintaining the health and welfare of their residents. This responsibility is discharged largely through land use planning and control. The normal approach taken at the local level is a preventative one in which care is taken to avoid the development of neighboring uses that are inconsistent. Retroactive action to correct an inconsistent pattern is generally limited to voluntary programs in which land owners are encouraged to take steps to reduce the noise impact on their property.

The County of Orange has an additional role in that it is the owner/operator of John Wayne Airport. In this role, the County can influence the noise environment, although only insofar as its actions are in accord with federal and state regulations.

THE NATURE OF SOUND

For the purpose of this Noise Element, sound may be described as a disturbance in the pressure of the air. Sound waves propagate in a predictable manner from a source to a receiver or observer.

A person listening to a sound converts the minuscule pressure variations to signals that may be interpreted in various ways depending on the person's individual perception of the sound. Sounds are often described by qualitative terms such as annoying or pleasant, loud or soft, noisy or quiet, or high-frequency or low-frequency.

Qualitative judgments of a sound may generally be quantified by measurements of three primary quantities; amplitude, frequency, and temporal pattern or duration.

1) **Amplitude in decibels (dB):**[1]
The strength of a sound depends on the pressure exerted by the sound waves. The greater the pressure, the louder the sound.

2) **Frequency, or pitch, in Hertz (Hz):**
High frequency sounds are produced by rapidly vibrating objects and low frequency sounds by slowly vibrating objects.

3) **Temporal pattern or duration:**
The pattern and length of time associated within a sound.

A sound pressure level of zero decibels corresponds, approximately, to the faintest sound perceptible, on the average, by persons with excellent hearing.

Human judgments of the noisiness of a sound depend on the overall level of the sound, the distribution of sound pressure level with frequency and the duration of the sound (or series of sounds).

COMMON NOISE SOURCE LEVELS

130 dBA: percussion section at symphony

150 dBA: firecracker

180 dBA: rocket launching from pad

[1]NOTE: words or phrases that are defined in the General Plan Appendices, APPENDIX VIII-1, DEFINITIONS AND ACRONYMS, are underlined the first time they occur in this Chapter.

As a result of extensive laboratory experiments and experience in the United States and in other countries, it has been found that use of a frequency-weighted sound pressure level provides measurements that correlate well with judgments of the noisiness or annoyance of a sound. That frequency weighting is, by international agreement, called the A-frequency weighting or A-weighting. A-weighting reduces the amplitude of the low frequency components of a sound relative to the mid- and high-frequency components.

For the purpose of assuring compatibility between the long-term outdoor noise level and projected, or actual, land uses, the measures of noise level referred to in this Noise Element are either the A-weighted Community Noise Equivalent Level (CNEL), in decibels, or a time-average equivalent sound level, also in decibels.

Everyday sounds normally range from 30 decibels (very quiet) to 100 decibels (very loud). Figure VIII-1 shows Community Noise Equivalent Levels from a variety of noise sources. The values range from 35 decibels in the quiet of a wilderness to approximately 85 decibels in noisy environments.

The transmission of sound involves three components: source, transmission path, and receiver. These sound components are not independent, but are subject to interaction. For example, a person (source) will raise his voice if he is aware that his listener (receiver) is hard of hearing.

To reduce the noise level inside a dwelling from the effects of a high-noise source -

FIGURE VIII-1.

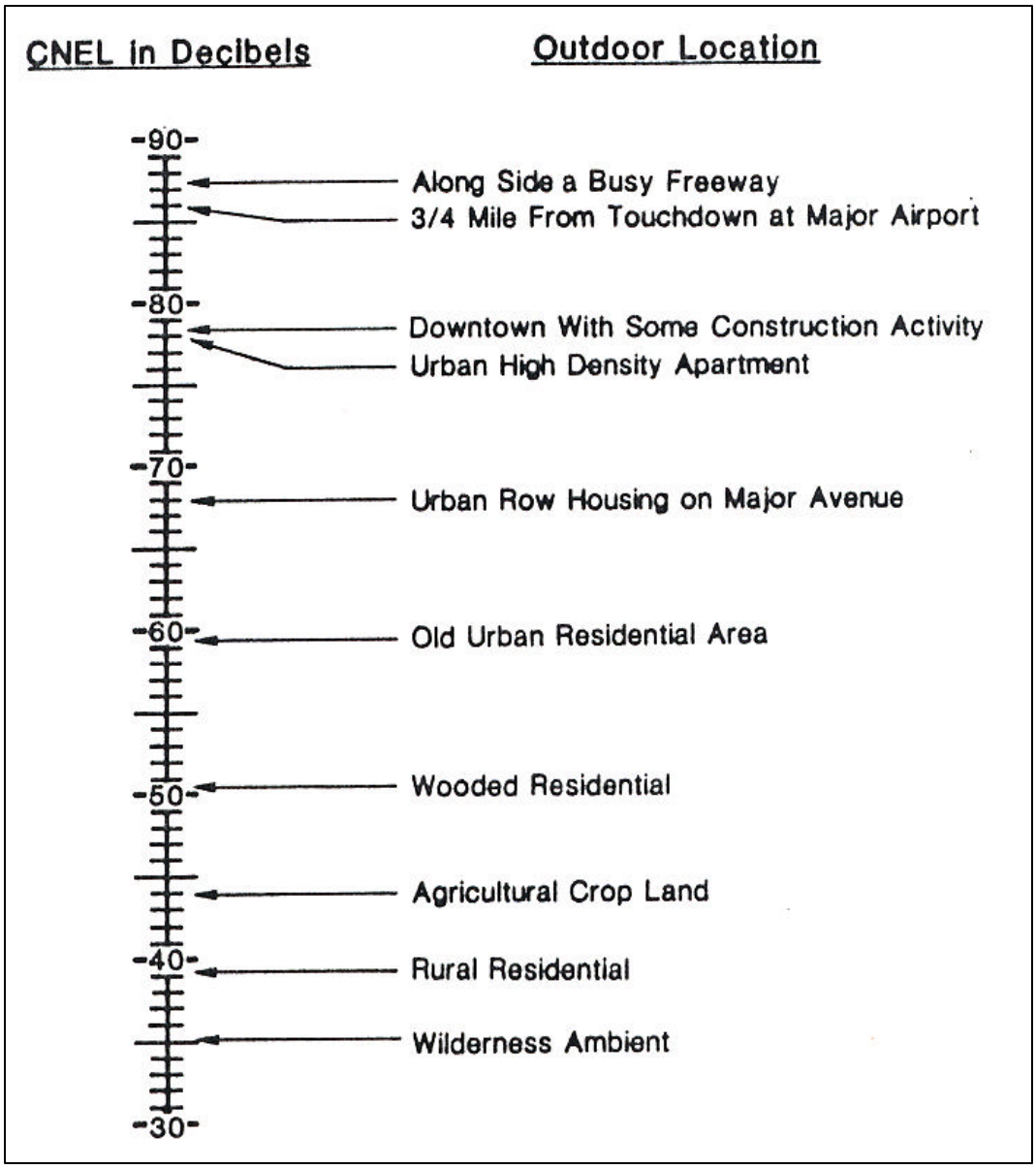

Examples of Outdoor Community Noise Equivalent Levels
Measured at Various Locations

Based on: U.S. Environmental Protection Agency, "Protective Noise Levels, Condensed Version of the EPA Levels Document,"1978, Figure 4.

traffic on a road, for example - either the source can be modified (by adding sound-absorbing material inside the engine compartment) or the transmission path can be adjusted by taking such measures as installing a wall or berm or providing structural modifications such as double-glazed windows and well-sealed doors in the dwelling.

The documented effects of excessive noise on people range from annoyance and inconvenience to temporary or permanent hearing loss. But, as the Environmental Protection Agency[2] notes, the problems associated with noise are much more widespread:

> Except for the serious problem of hearing loss, there is no human illness known to be directly caused by noise. But throughout dozens of studies, noise has been clearly identified as an important cause of physical and psychological stress, and stress has been directly linked with many of our most common health problems. Thus, noise can be associated with many of these disabilities and diseases, which include heart disease, high blood pressure, headaches, fatigue, and irritability.
>
> Noise is also suspected to interfere with children's learning and with normal development. Noise is reported to have triggered extremely hostile behavior among persons presumably suffering from emotional illness. It is suspected to lower our resistance, in some cases, to the onset of infection and disease.

In view of the limitation on our state of knowledge concerning noise and the variability of human response to noise, the inaction of community noise programs is a difficult process. The search for meaningful standards must distinguish between what is

[2]EPA, NOISE: A Health Problem, August 1978, page 23.

merely interesting information and what is truly useful knowledge for the protection of the community welfare.

A number of factors affect the measurement and control of noise sources. There are thousands of permanent stationary noise sources and several hundred thousand mobile noise sources within nearly any area.

Transmission characteristics of sound are directly affected by the size, shape, and density of the thousands of barriers, structures, and topographical features in the county. Complicating the transmission paths is the fact that localized meteorological conditions may distort the sound wave in unpredictable ways.

For these reasons, the Noise Element is concerned with the major predictable sound sources such as airplanes, highways, and railroads as well as certain stationary sources. Considerations of the distortions of sound by natural and man-made features were only generally considered in the evaluation and mapping of the noise impacted areas in the context of this Element.

It is for these reasons that elsewhere in this document "worst case" assumptions have been made. Thus, there are noise levels at which a detailed acoustical analysis on a project-specific basis is required. In general, this occurs if there is any question about the noise impacts associated with a development proposal. (See Noise Referral Zones section in this chapter.)

THE EXISTING NOISE ENVIRONMENT

Noise is generated by numerous sources which are found near places where people both live and work. Of particular concern are those sources generating noise levels above the prevailing background noise level.

The most common mobile noise sources in the County are transportation- related (automobiles, trucks, motorcycles, railroads, and aircraft). Motor vehicle noise is of concern because it is characterized by a high number of individual events, which often create a sustained noise level, and because of its proximity to areas sensitive to noise exposure. Rail and aircraft operations, though infrequent, may generate extremely high noise levels that can be disruptive to human activity. Aircraft noise appears to produce the greatest community anti-noise response, although the duration of the noise from a single airplane is much less, for example, than that from a freight train.

In February 1985, the Board of Supervisors adopted the John Wayne Airport Master Plan (AMP) and the Santa Ana Heights Land Use Compatibility Program (LUCP).

The Airport Master Plan includes an ultimate limit of 73 average daily departures (ADDs) for most commercial jet operations. In preparing the LUCP, a projected 65-decibel CNEL noise contour reflecting expected future flight level and a reasonable mix of aircraft types was utilized.

This contour referred to as the Project Case and depicted in EIR 508 (prepared jointly for the AMP and LUCP), was approved by the Board of Supervisors as the implementation line for two noise compatibility programs: Purchase Assurance and Acoustical Insulation. It was also utilized in the preparation and Board adoption of a land use plan (Land Use Element and Community Profile amendments) for unincorporated areas of Santa Ana Heights.

This contour line remains fixed as to location until modified by a Noise Element Amendment. Consideration of a future revision to the Project Case Contour would probably occur subsequent to full implementation of Phase II of the JWA Master Plan.

Figure VIII-2 depicts the current noise contours which surround John Wayne Airport as well as the policy implementation line. Figure VIII-2 also represents the future levels of aircraft noise because of the assumption of 72,000 operations per year established as a part of the amendment in 1979. This map also depicts the Project Case Contour for John Wayne Airport as adopted by the Santa Ana Heights Land Use Compatibility Program and the John Wayne Airport Master Plan. Precise noise

> "Noise proves nothing. Often a hen who has merely laid on egg cackles as if she had laid an asteroid."
>
> *Mark Twain*

contour maps are available from RDMD which depict these two areas with the map accuracy standards that are required for project-specific evaluations.

Information in the section that follows includes typical noise contours as projected for traffic on arterial highways. Figure VIII-3 shows typical cross-sections of arterial highways, which depict how noise levels vary with distance and speed. Figure VIII-4 is a generalized view of how noise from the assumed speed and volume of traffic might be affected by topography or by man-made features. The intent is to portray typical measures which may reduce the "worst case" noise impact area. (Note: Figures VIII-3 and VIII-4 have been prepared only for illustrative purposes. They are not intended to represent noise control policy.)

Figure VIII-5 depicts conditions that were expected in the year 2000. The contours are based on assumptions related to the speed and volume of traffic that is a worst case. Heavier traffic at a lower speed or lighter traffic at a higher speed would each result in a smaller area impacted (i.e., narrower contours). Standard rights-of-way have also been assumed.

Under the assumptions, the 70-decibel CNEL contour for secondary and primary arterials falls within the right-of-way, if not within the roadway itself. These contours are not depicted on Figure VIII-5 for clarity of presentation. Their addition would not serve to depict residential areas so impacted and would only clutter the maps further.

The CNEL resulting from the noise produced by many sources is not depicted. Thus, there are separate maps for each major source. Also, only an approximation has been made in the vicinity of intersections. Community noise in such areas is a complex phenomenon and can be evaluated only by detailed measurements and analysis of the noise at a specific location of interest.

Figure VIII-6 depicts noise contours for through railroad facilities in the unincorporated parts of the County. The contours are based on only a modest increase in the level of railroad operations. At the General Plan level of detail, there is

Figure VIII-2

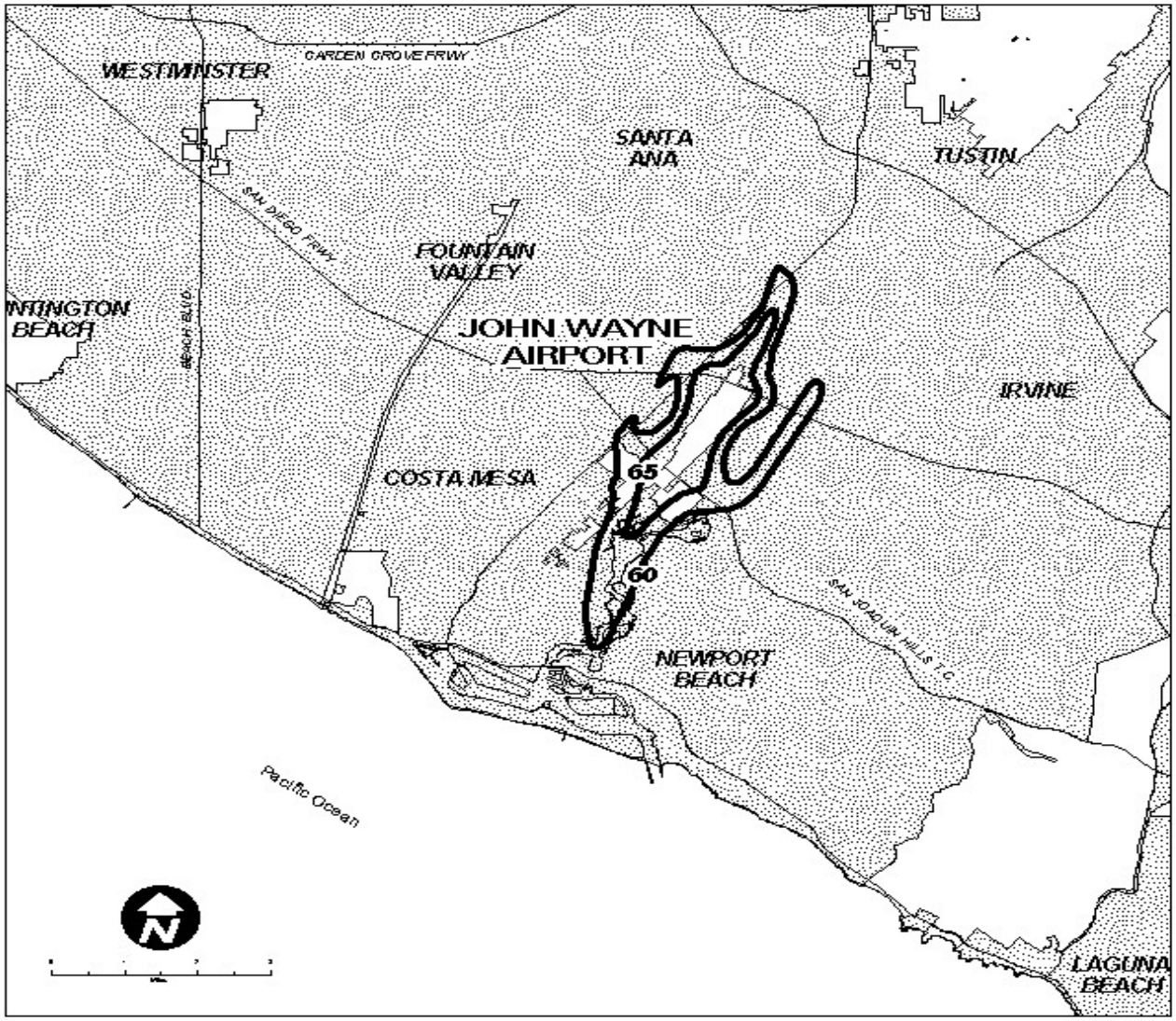

GENERALIZED NOISE EQUIVALENT LEVEL CONTOURS
From Air Facilities

Figure VIII-3

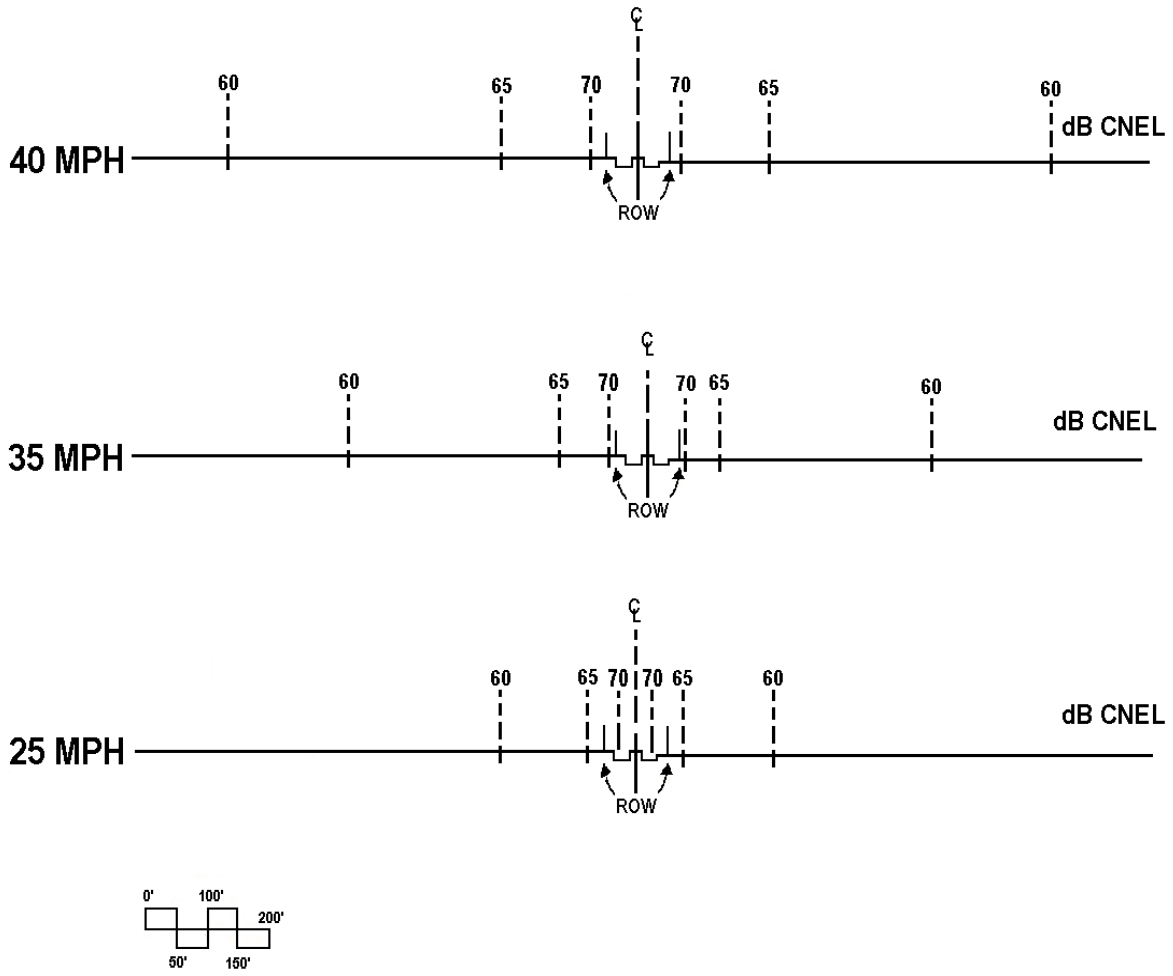

NOTES: Calculations based on hard site, flat terrain, 180' angle of view, standard County truck/auto mix, 0-2% roadway gradient, roadway at level of service C, and no contributions from other noise sources.

℄: Center Line ROW : Right-of-Way Line

EFFECT OF SPEED ON COMMUNITY NOISE EQUIVALENT LEVELS

Figure VIII-4

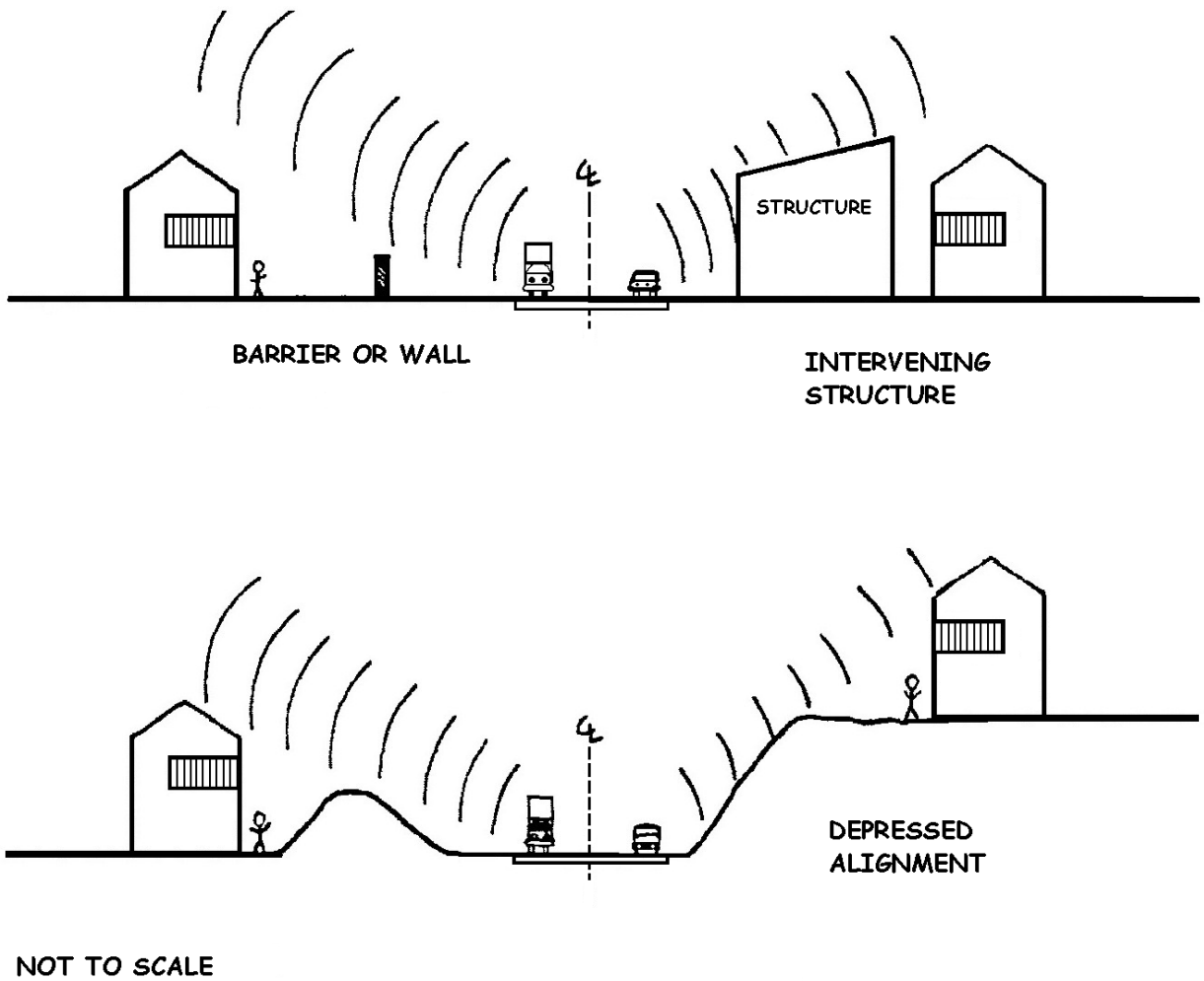

TYPICAL NOISE MITIGATION MEASURES

no real difference in the location of the contours for the years 2000 and 2025. The contours plotted represent levels of activity for the year 2000. Thus, 1980 lines would be slightly inside those shown on Figure VIII-6. The location of the contours for the year 2025 would require recalculation if there were a significant shift in rail activity. A new high-speed rail facility between Los Angeles and San Diego is not one of the assumptions underlying the Noise Element.

Other noise sources in a community include industry, construction, and people and are often referred to as "fixed" sources. Industrial noise generated by processing and operations is usually of long duration at relatively low frequencies. Construction noise sources (diesel engines, air compressors, electric motors, etc.) generate noise for extended periods of time with intermittent high noise levels.

Population noise represents the noise generated by human activity in the community. Sources include air conditioners, lawn mowers, radio/stereo/television, sports arenas, schools, and other entertainment and commercial activities. In general, the control of noise from these sources is addressed in the County Noise Ordinance which is administered by the County's Health Care Agency.

Figure VIII-5

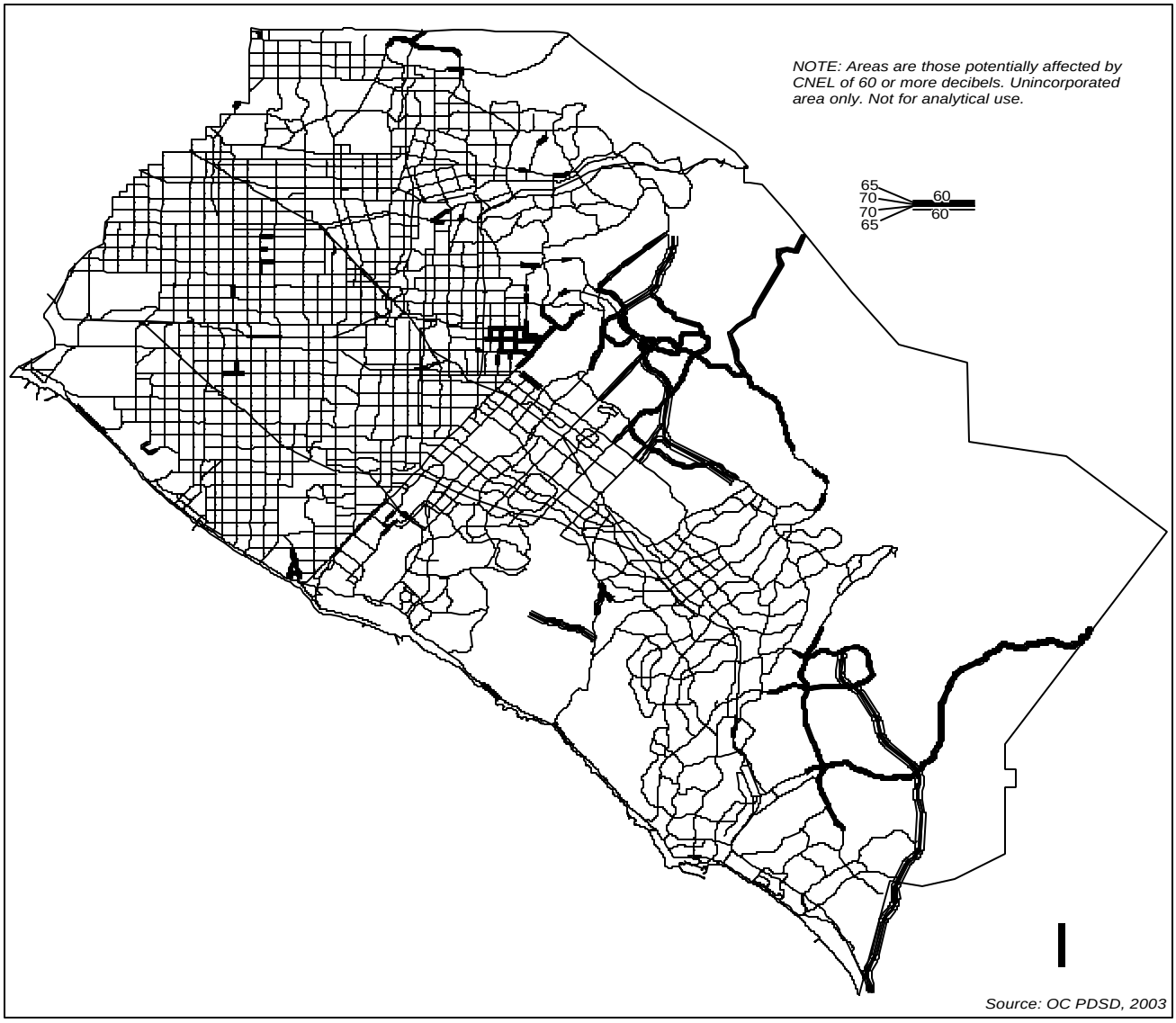

GENERALIZED COMMUNITY NOISE EQUIVALENT LEVEL CONTOURS
From Arterial Highways

Figure VIII-6

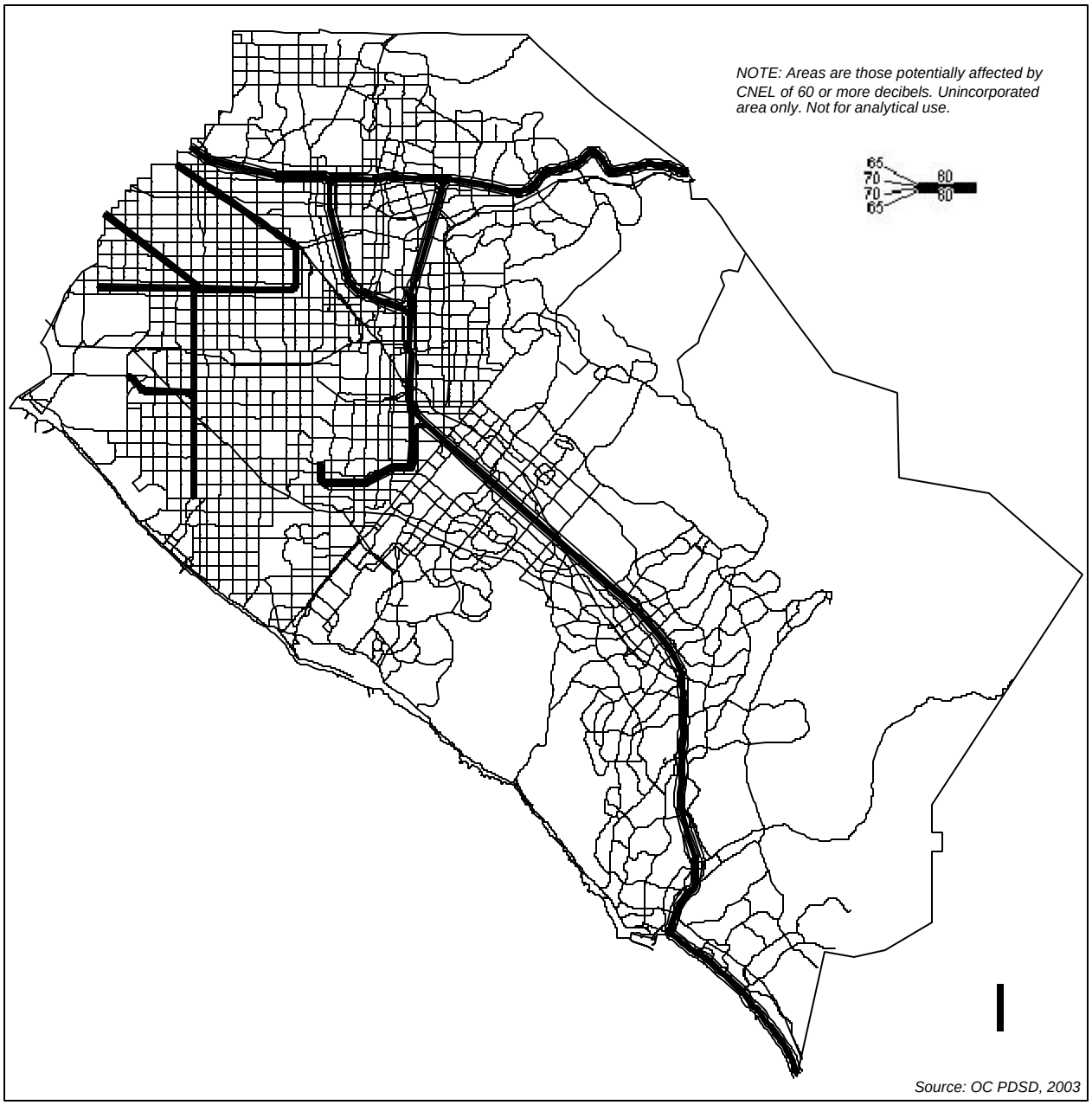

GENERALIZED COMMUNITY NOISE EQUIVALENT LEVEL CONTOURS
From Through Railroads

ESTIMATES OF AFFECTED POPULATION

Table VIII-1 contains the estimates (existing and future) of population residing in the potential noise-impacted areas. It must be stressed that these estimates are based on unmitigated situations, so that the number of people actually affected will be less dependent on mitigation measures employed.

This table is based on data from the 2000 census of Population and Housing data and from OCP- 2000 projections of dwelling units, used in conjunction with the figures previously described. Standard factors for the population per household were applied to derive the population estimates. Once again, it must be stressed that this represents a "worst case" situation.

ANALYSIS OF FUTURE CONDITIONS

By the year 2025, the horizon year of this Element, there will be more people in Orange County, more economic activity, and more traffic of all types. Increased development will lead to more transportation facilities. Overall, the County will exhibit higher population densities. All of these factors will lead to situations in which a greater number of people will reside in areas potentially subject to higher noise impacts.

For the unincorporated area of Orange County, a relatively high percentage of this development will have occurred subsequent to the adoption of land use-noise compatibility policies and standards (the Noise Element was originally adopted in 1975). As a result, more of the dwellings, offices, and other inhabited structures will have been built in accordance with the policies and standards that are contained in this Noise Element.

An estimate of the potential population residing in noise impacted areas was prepared and presented in Chapter II, Background for Planning. That estimate represents the maximum number of people likely to live in those areas. The usefulness of the estimate is for comparative, rather than absolute evaluations. The actual number of affected residents will be less (and probably significantly less), although there will be some Orange County residents who will reside in areas that are noisier than is desired. Some of the factors that may influence how many people actually will live in noisy areas are discussed in the paragraphs that follow.

TABLE VIII-1.

POPULATION POTENTIALLY AFFECTED BY COMMUNITY NOISE EQUIVALENT LEVELS

(In Thousands)

	70 decibels and higher		65 decibels and higher[1]		60 decibels and higher[2]	
SOURCE	2000	2025	2000	2025	2000	2025
Roads	4	19	18	100	51	258
Rail	*	*	3	3	4	4
Air	4	5	9	27	42	140
Composite[3]	5	20	25	120	80	37

* Less than one thousand people

Notes: (1) Includes those potentially impacted by more than 70 decibels.

(2) Includes those potentially impacted by more than 65 decibels.

(3) Composite value is not a total in that certain areas are impacted by more than one source.

Some planning constraints exist. Local jurisdictions have control over only some factors which influence the level of noise in an area. Noise compatible land use planning and the discretionary review of project applications are probably the best noise prevention and control tools available to the County. However, these mechanisms are of limited effectiveness in dealing with those instances in which a pre-existing noise-land use incompatibility exists. Unless a development proposal involving a discretionary approval is made, there are no mechanisms to ensure that corrective action will be taken.

The structure of the County's economy could change significantly. While this is a remote possibility within the time horizon of the Noise Element, such shifts are conceivable. If so, there could be new sources of community noise. Similar changes could occur in the temporal work patterns associated with the local economy. If more multiple work shifts were to occur, then the proportion of traffic occurring during the evening (7 - 10 p.m.) or night (10 p.m. - 7 a.m.) time periods may increase.

While these changes would probably have a beneficial effect on peak period traffic congestion, they could increase Community Noise Equivalent Levels due to the additional weight given to noise that occurs during the evening and nighttime periods.

Technological changes are a possibility as they relate to transportation facilities. Reductions in the noise from automobiles and trucks are certainly possible. Quieter tires or quieter engines could each lead to a significant reduction in the areas affected by noise from arterial highways. Neither of these topics is subject to local control nor are the effects of local influence very great.

As a result, the assumption made in this document is that the noise levels associated with the current vehicle fleet are the appropriate ones to use. When conclusive evidence is available that supports different assumptions, then they will be incorporated in a subsequent amendment to this Element.

A similar set of uncertainties exists as it relates to noise characteristics of future generations of aircraft, both civilian and military. Once again, the assumptions utilized here will be changed when the characteristics and utilization rates of such new aircraft are known.

Another technological change that may have an impact on the future noise environment is the role of telecommunications in the lifestyle of county residents. If there should be a significant substitution of communications for transportation, then the traffic volumes and the level of noise from arterial highways might be less than forecasted. Careful attention to and observation of changing traffic patterns will be required prior to adjusting the community noise estimates.

A final technological factor is the absolute accuracy of the estimates of future noise environments. Analytical models used to

develop estimates will be improved as new evidence becomes available. The accuracy of the data base will be improved by the acquisition of new data through various national and international efforts. When improved analytical models are available, it may be appropriate to recalculate the noise contours contained in this document.

There are fiscal constraints which affect the future noise environment as well. Attenuation measures all have a cost associated with them. Those that are to be paid for by public agencies (such as acoustical barriers along freeways or arterial highways) must compete for scarce resources with other public needs. Cost considerations are particularly critical for retroactive improvements.

Noise Referral Zones

The noise contours depicted on the maps in the Existing Noise Environment section of this Element reflect transportation noise sources (i.e., arterial highways, rail lines and airports) which are, and are expected to remain, major sources of noise in unincorporated areas of Orange County.

The contours shown on the maps indicate noise-affected areas which constitute Noise Referral Zones for purposes of this Element. Such a zone is defined as that area with a total noise environment of 60 decibels Community Noise Equivalent Level (CNEL) or more. It is the level at which either State or Federal laws and standards related to land use become important and, in some cases, supersede local laws and regulations.

Any development proposed which may be impacted by a CNEL from each noise source of 60 or more decibels will be evaluated on a project specific basis. The contour figures in the Existing Noise Environment section of this Element for railroads and arterial highways depict a "worst case" situation. As used here, "worst case" means the maximum area that might be impacted, given that:

a) No sound absorbing or attenuating effects of topography or man-made features have been considered; and

b) The contours reflect operation of the facilities at their design level (which may be greater than the current level of traffic and may be less than that generated if the facility were upgraded after adoption of this Element).

The intent of the Noise Referral Zone is to act as a triggering mechanism or flag for development proposals in areas potentially adversely affected by high noise levels. If a development proposal falls within a Noise Referral Zone, it will be subject to evaluation and review to determine whether the project is indeed within an area where the CNEL is 60 or more decibels. It is during this initial evaluation of a project that the effect of existing development, topographic features, or other such noise attenuation measures is considered, although at a very general level of detail.

Acoustical analysis reports shall be prepared in any instance where there is the possibility

COMMON NOISE SOURCE LEVELS

70 dBA: television

80-90 dBA: blender

100 dBA: wood-working class

130 dBA: jack-hammer

157 dBA: balloon pop

of unacceptable noise impacts. Thus, unless it can be shown with certainty that the project is outside the area that has a CNEL of 60 or more decibels, an acoustical analysis report will be required.

OBJECTIVES AND POLICIES

This section contains the key objectives and assumptions that have guided the development of the Noise Element. They are either explained fully or are referenced with information as to where a full explanation can be found and a unifying characteristic of all assumptions is that they are consistent with those used in other elements of the General Plan.

Objectives, Assumptions, and Definitions

A key objective of this Noise Element is to ensure that each County resident's quality of life is not affected adversely by high noise levels. Thus mitigation of noise is of paramount importance.

Noise affects all land uses. Residential uses are the most noise sensitive because of structural design, 24-hour per day duration of use and because such uses typically need, and are designed to incorporate outdoor living areas. Other noise sensitive uses include schools, hospitals, and places of worship. While mitigation of the effects of excessive noise in enclosed or interior areas are feasible (if expensive), it becomes more difficult for outdoor areas (particularly for aircraft noise sources).

In general, any development that results in a situation where there is an unacceptable level of noise in any living area (interior or exterior), must be mitigated or the project or use revised to avoid the conflict.

Aircraft noise as it affects outdoor living areas[3] is particularly critical because it is generally impracticable to provide sufficient noise control to achieve an acceptable noise environment.

Noise sensitive land uses are defined as those specific land uses that have associated indoor and/or outdoor human activities that may be subject to stress and/or significant interference from noise produced by community sound sources.

---

[4]"Outdoor living area" is a term used by the County of Orange to define spaces that are associated with residential land uses typically used for passive recreational activities or other noise-sensitive uses. Such spaces include patio areas, barbecue areas, jacuzzi areas, etc. associated with residential uses; outdoor patient recovery or resting areas associated with hospitals, convalescent hospitals, or rest homes; outdoor areas associated with places of worship which have a significant role in services or other educational purposes which may be adversely impacted by noise. Outdoor areas usually not included in this definition are: front yard areas, driveways, greenbelts, maintenance areas, and storage areas associated with residential land uses; exterior areas at hospitals that are not used for patient activities; outdoor areas associated with places of worship and principally used for short-term social gatherings; and outdoor areas associated with school facilities that are not typically associated with educational uses prone to adverse noise impacts (for example, school play yard areas).

Such human activity typically occurs daily for continuous periods of 24 hours or is of such a nature that noise is significantly disruptive to activities that occur for shorter periods. Specifically, noise sensitive land uses include: residences of all types, hospitals, rest homes, convalescent hospitals, places of worship, and schools.

Development in this context refers to the initial development of land from an unimproved state to the redevelopment of land in which one use is replaced by another or to a significant intensification in an existing use (e.g., replacing a single family dwelling unit with a four-plex). These types of development are the ones on which the County takes discretionary action. Table VIII-2 depicts major uses in terms of noise sensitivity.

For the purpose of complying with the Table VIII-2 criteria, the noise from all sources will be combined and rated in terms of Community Noise Equivalent Level (CNEL). For multiple noise sources, all sources can either be mathematically combined or the CNEL rating can be calculated in the following manner.

A primary, or loudest, noise source will be identified. All other sources will then be considered secondary noise sources. Secondary noise sources that are at least 10 decibels less than the primary source can be considered to have an acoustically insignificant effect on the noise level rating and therefore will not need to be included in the CNEL calculations. If the primary source requires abatement to comply with Table VIII-2 requirements, then the abated CNEL rating for the primary source will be used to determine the significance of any secondary source. For example, if the primary source is 75dB CNEL and requires abatement to 65dB CNEL, then any secondary source of 55dB CNEL or less can be considered acoustically insignificant. Therefore, a secondary source of 60dB CNEL would require abatement to a 55dB CNEL rating thereby making that acoustically insignificant.

Residential land use is the most sensitive because of the nature of activities which occur over a 24-hour period as well as the generally accepted need for, and design incorporating, outdoor living areas. An upper CNEL limit of 65 decibels was chosen above which noise is extremely annoying. Previous policy decisions by the Board of Supervisors have endorsed the 65-decibel CNEL as the critical sound-level criterion in guiding planning decisions for sensitive land uses.

"Of all noises, I think music is the least disagreeable."

Samuel Johnson

TABLE VIII-2.

COMPATIBILITY MATRIX FOR
LAND USE AND COMMUNITY NOISE EQUIVALENT LEVELS
(CNEL)

TYPE OF USE	65+ decibels CNEL	60 to 65 decibels CNEL
Residential	3a, b, e	2a, e
Commercial	2c	2c
Employment	2c	2c
Open Space		
Local	2c	2c
Community	2c	2c
Regional	2c	2c
Educational Facilities		
Schools (K through 12)	2c, d, e	2c, d, e
Preschool, college, other	2c, d, e	2c, d, e
Places of Worship	2c, d, e	2c, d, e
Hospitals		
General	2a, c, d, e	2a, c, d, e
Convalescent	2a, c, d, e	2a, c, d, e
Group Quarters	1a, b, c, e	2a, c, e
Hotel / Motels	2a, c	2a, c
Accessory Uses		
Executive Apartments	1a, b, e	2a, e
Caretakers	1a, b, c, e	2a, c, e

Note: See Table VIII-3 for definitions of the entries in this table.

TABLE VIII-3.

EXPLANATION AND DEFINITIONS ON TABLE VIII-2

ACTION REQUIRED TO ENSURE COMPATIBILITY
BETWEEN LAND USE AND NOISE FROM EXTERNAL SOURCES

1 = Allowed if interior and exterior community noise levels can be mitigated.
2 = Allowed if interior levels can be mitigated.
3 = New residential uses are prohibited in areas within the 65-decibel CNEL contour from any airport of air station; allowed in other areas if interior and exterior community noise levels can be mitigated. The prohibition against new residential development excludes limited "infill" development within an established neighborhood.

STANDARDS REQUIRED FOR COMPATIBILITY OF LAND USE AND NOISE

a = Interior Standard: CNEL of less than 45 decibels (habitable rooms only).
b = Exterior Standard: CNEL of less than 65 decibels in outdoor living areas.
c = Interior Standard: Leq (h)=45 to 65 decibels interior noise level, depending on interior use.
d = Exterior Standard: Leq (h) of less than 65 decibels in outdoor living areas.
e = Interior Standard: As approved by the Board of Supervisors for sound events of short duration such as aircraft flyovers or individual passing railroad trains.

KEY DEFINITIONS

Habitable Room – Any room meeting the requirements of the Uniform Building Code or other applicable regulations which is intended to be used for sleeping, living, cooking or dining purposes, excluding such enclosed spaces as closets, pantries, bath or toilet rooms, service rooms, connecting corridors, laundries, unfinished attics, foyers, storage spaces, cellars, utility rooms and similar spaces.

Interior – Spaces that are covered and largely enclosed by walls.

Leq (h) – The A-weighted equivalent sound level averaged over a period of "h" hours. An example would be Leq (12) where the equivalent sound level is the average over a specified 12-hour period (such as 7:00 a.m. to 7:00 p.m.). Typically, time period "h" is defined to match the hours of operation of a given type of use.

Outdoor Living Area – Outdoor living area is a term used by the County of Orange to define spaces that are associated with residential land uses typically used for passive private recreational activities or other noise-sensitive uses. Such spaces include patio areas, barbecue areas, jacuzzi areas, etc. associated with residential uses; outdoor patient recovery or resting areas associated with hospitals, convalescent hospitals, or rest homes; outdoor areas associated with places of worship which have a significant role in services or other noise-sensitive activities; and outdoor school facilities routinely used for educational purposes which may be adversely impacted by noise. Outdoor areas usually not included in this definition are: front yard areas, driveways, greenbelts, maintenance areas, and storage areas associated with residential land uses; exterior areas at hospitals that are not used for patient activities; outdoor areas associated with places of worship and principally used for short-term social gatherings; and outdoor areas associated with school facilities that are not typically associated with educational uses prone to adverse noise impacts (for example, school play yard areas).

As a result of the Board of Supervisors' adoption of the Santa Ana Heights Land Use Compatibility Plan (LUCP), a projected 65-decibel CNEL noise contour was adopted for John Wayne Airport reflecting expected future flight levels and a reasonable mix of aircraft types. The policy implementation lines can only be changed as part of a Noise Element Amendment.

The County also has a regular program of monitoring noise in the vicinity of John Wayne Airport. The noise-monitoring program is used to provide supporting data to confirm applicability of the fixed policy implementation lines. The locations of other CNEL contours are plotted for both of these facilities, as well. The 60-decibel CNEL contour is the boundary of the noise referral zone. The other contours are not as important for land use planning purposes since key development policies are not based upon them.

All new residential uses, schools, places of worship, and convalescent hospitals are generally incompatible within the 65-decibel CNEL contour for any other airport or air station or for any other source of noise. These uses normally require outdoor living areas for functional or therapeutic purposes or, in the case of nearly all residential projects, to afford the full life style that is the goal of the County's General Plan. For these reasons, the ability to mitigate the effects of noise on these outdoor living areas is of paramount importance. Since it is generally impracticable to mitigate aircraft-induced noise in outdoor living areas, such uses are incompatible.

Noise sensitive uses which have no outdoor living areas may be compatible. These uses shall be considered compatible if and only if all standards contained in this Element are met.

Non-noise sensitive uses are compatible so long as interior noise levels meet the policies and standards established by this Noise Element.

Policies

Tables VIII-2 and VIII-3 were derived from the policies that are contained in narrative form in this chapter, from state requirements and standards and from other policies of the Board of Supervisors that relate to noise environments. The tables are meant to convey, in objective terms, the compatibility of, and standards for, the integration of land use planning and either calculated or measured noise environments.

Three general types of noise-impact and noise-mitigation situations can be identified and related to the noise environment.

First are those situations where a new use is being proposed that is impacted by an existing noise source. "New" in this context refers both to the initial development of land from an unimproved state and to the redevelopment of land in which one use is replaced by another. This is the most

common situation and is typified by a residential tract adjacent to, and impacted by, noise from an arterial highway.

Mitigation of project noise through project design in this situation is clearly a preventative approach to assure compatibility of land use with long-term outdoor noise.

A second situation occurs when an existing use is impacted by a new or expanded source of noise. This situation is typified by general planning of a new transportation facility close enough to existing uses to have noise impacts on them or the expansion of such a facility beyond currently planned levels. Again, noise mitigation through project design is a preventative approach in that noise/land use incompatibilities are avoided. This situation is one in which the project proponent is obliged to mitigate the impacts of the new source of noise.

For the first two situations, the applicable standards are depicted on Tables VIII-2 and VIII-3. In the first situation, any project that is approved must meet the standards specified through appropriate noise mitigation measures, or the project must be modified to ensure consistency with the Noise Element.
In the second situation, there must be a similar application of noise mitigation or other steps taken by the project proponent to avoid the inconsistency. In either case, the acceptable levels of noise in affected areas are as specified on Tables VIII-2 and VIII-3.

The third situation is one in which land uses and noise sources were established prior to adoption of noise policies and standards and are thus rendered incompatible "after fact." (The Noise Element's initial adoption was in 1975.) This situation is one in which existing uses are located within noise impact areas from existing sources. In most instances, these inconsistencies predate both the current knowledge of, and concern for, the deleterious effects of noise and the resulting statutes (e.g., the California Environmental Quality Act and planning laws related to local general plans). In the third situation, remedial action would be required to obtain consistency with the Noise Element's standards identified on Tables VIII-2 and VIII-3. Such action would lead to retroactive compatibility. While County policy stresses the desirability of such steps; they are voluntary on the part of individual property owners or project proponents.

- ***Major Noise Element Policies***

The policies listed below help guide the implementation of the Noise Element. They provide the link between the noise related goals of the General Plan and the programs that have been designed to accomplish the goals.

1. INTERGOVERNMENTAL COOPERATION

To cooperate with other County agencies and levels of government to bring about a comprehensive and

coordinated effort to reduce noise levels.

1.1 To recommend needed changes in Federal and State legislation which will be effective in reducing noise and can be efficiently administered.

1.2 To cooperate in efforts to develop mechanisms to assure coordination of all governmental jurisdictions in the field of noise control.

These policies involve cooperative efforts with other jurisdictions in order to achieve greater compatibility between noise and land uses. They acknowledge the regional aspects of many noise-related issues. They are implemented primarily through existing cooperative mechanisms such as Southern California Association of Governments and the County Supervisors Association of California.

2. PUBLIC INFORMATION AND NOTIFICATION

To disseminate public information regarding noise and programs to reduce noise levels and their impacts.

2.1 To provide information to the public regarding the health effects of high noise levels and means of mitigating such levels.

2.2 To provide information regarding Noise Referral Zones and noise attenuation measures to developers and the public.

2.3 To cooperate with industry to develop public information programs on noise abatement.

2.4 To require that prospective purchasers or end users of property be notified of overflight, sight and sound of routine aircraft operations by all effective means including:

a) Requiring new residential subdivisions which are located within the 60-decibel CNEL noise contour or are subject to overflight, sight and sound of aircraft operating from John Wayne Airport to have such information included in the State of California Final Subdivision Public Report.

b) Requiring that Declaration and Notification of Aircraft Noise and Environmental Impacts be recorded and available to prospective purchasers or end users of property located within the 60-decibel CNEL noise contour for any airport or air station or is subject to routine aircraft overflight.

c) Requiring an Aviation Easement across property that is within the 60-decibel CNEL noise contours for any airport or Los Alamitos air station or is subject to routine aircraft overflight.

d) Requiring the posting of noise impact notification signs in all sales offices associated with new residential development that is located within the 65-decibel CNEL contour from any airport or air station.

e) Any other appropriate means as specifically directed by the Board of Supervisors.

These policies are implemented at various stages of the development review process. The intent of this section is to utilize the most efficient means of providing appropriate noticing. Thus, some of these steps occur at the tract map stage; others at the building permit stage.

3. TRANSPORTATION SYSTEM NOISE CONTROL

To encourage the control of noise from transportation systems as the most efficient and effective means of reducing noise at the source.

3.1 To enforce noise sections of the State Motor Vehicle Code.

3.2 To encourage the State to require adequate noise suppression devices (mufflers, etc.) for all motor vehicles operated within the County.

3.3 To restrict the use of trail bikes, mini-bikes and other off-road motor vehicles in areas of the County except where designated for that purpose.

3.4 To study commercial truck movements and operations in the County and establish truck routes away from noise-sensitive areas where feasible.

3.5 To encourage development of a mass multi-modal transit system with reduced noise emission characteristics.

3.6 To review the Federal Railroad Noise Standards of 1974 for possible adoption by Orange County.

3.7 To continue the current policy of encouraging the use of noise reducing modifications to jet engines and the use of quieter jet aircraft at John Wayne Airport.

3.8 To employ noise mitigation measures in the design of new arterials consistent with funding capability and to support efforts by the State Department of Transportation for remedial acoustical protection for existing highways where needed by the County.

Since the County has little direct control over vehicle noise-level standards, cooperative efforts with state and

federal offices are important. In those instances where the County is directly involved (usage in County parks, for example), these policies are implemented through ordinances and operating procedures.

4. NOISE MONITORING AND ABATEMENT

To monitor noise levels, and adopt and enforce noise abatement programs.

4.1 To enforce the County's Noise Ordinance to prohibit or mitigate harmful and unnecessary noise within the County.

4.2 To encourage Orange County cities to adopt the County's model noise ordinance.

4.3 To develop and enforce standards in addition to those presently included in the Noise Ordinance to regulate noise from construction and maintenance activities and commercial public and industrial 1 land uses.

4.4 To consider noise reduction as a factor in the purchase of County maintenance equipment and the use of such equipment by County contractors and permittees.

4.5 To require that noise from motors, appliances, air conditioners, and other consumer products does not disturb the occupants of surrounding properties.

4.6 To continue identification of noise-producing sources, such as helicopter operations, as part of subsequent amendments to the Noise Element.

These policies are implemented jointly by the County Health Care Agency and the Resources and Development Management Department through the Noise Ordinance, and by RDMD in its procurement process for new and replacement vehicles and equipment.

5. NOISE/LAND USE PLANNING

INTEGRATION

To fully integrate noise considerations in land use planning to prevent new noise/land use conflicts.

5.1 To utilize the criteria of acceptable noise levels for various types of land uses as depicted on Tables VIII-2 and VIII-3 in the review of development proposals.

5.2 To prohibit new residential land uses within the 65-decibel CNEL contour from any airport or air station.

5.3 To limit new non-residential noise-sensitive land uses that are within a 65-decibel CNEL area from any source. Noise sensitive land uses will be permitted if, and only if, appropriate mitigation measures are included such that the standards contained in this Element and in appropriate State and Federal Codes are met. Specifically, non-residential noise-sensitive land uses include: hospitals, rest homes, convalescent hospitals, places of worship, and schools.

5.4 To stress the importance of building and design techniques in future site planning for noise reduction.

5.5 To utilize the California Noise Standards for Airports in planning for areas surrounding military as well as civilian airports.

These policies are implemented at different stages in the review of projects on which the County takes discretionary action. Tables VIII-2 and VIII-3 succinctly depict the County policies related to land uses and acceptable noise levels. The tables are the primary tools which allow RDMD to ensure integrated planning for compatibility between land uses and outdoor noise.

6. NOISE SENSITIVE LAND USES

To identify and employ mitigation measures in order to reduce the impact of noise levels and attain the standards established by the Noise Element, for both interior areas and outdoor living areas for noise sensitive land uses.

6.1 To encourage all property owners within the identified Noise Referral Zones to acoustically insulate all living quarters. This will be optional to the property owner.

6.2 To continue enforcement of Chapter 35 of the Uniform Building Code, currently adopted edition, and the California Noise Insulation Standards (Title 25 California Administrative Code).

6.3 To require that all new residential units have an interior noise level in living areas that is not greater than 45 decibels CNEL with it being understood that standard construction practices reduce the noise level by 12 decibels CNEL with the windows open and 20

"Silence is exhilarating at first-as is noise-but there is sweetness to silence outlasting exhilaration.."

Edward Hoagland

decibels CNEL with the windows closed. Higher attenuation than listed above may be claimed if adequate field monitoring or acoustical studies are provided to and approved by the County.

6.4 To require that all new residential units have an interior noise level in habitable rooms that does not exceed acceptable levels as caused by aircraft fly-overs or as caused by individual passing railroad trains.

6.5 All outdoor living areas associated with new residential uses shall be attenuated to less than 65 decibels CNEL.

6.6 To urge the use of acoustical insulation programs for schools located in the county, and where subject to County approval, to insure that new buildings for school uses meet state and local acoustical standards.

6.7 To apply noise standards as defined in the Noise Element for noise-sensitive land uses.

These policies also are reflected in Tables VIII-2 and VIII-3. They are implemented in all phases of project review.

[5]An arterial highway, as long as it is shown on the Master Plan of Arterial Highways, may exist in its ultimate form, may exist in a partial configuration, or may only be planned. Designation of the arterial highway on the plan and the traffic and noise projections which accompany this designation are, in this context, the "existing noise source."